# Corian® Specification Sheet : Purity 8250

[Revised July 2021]

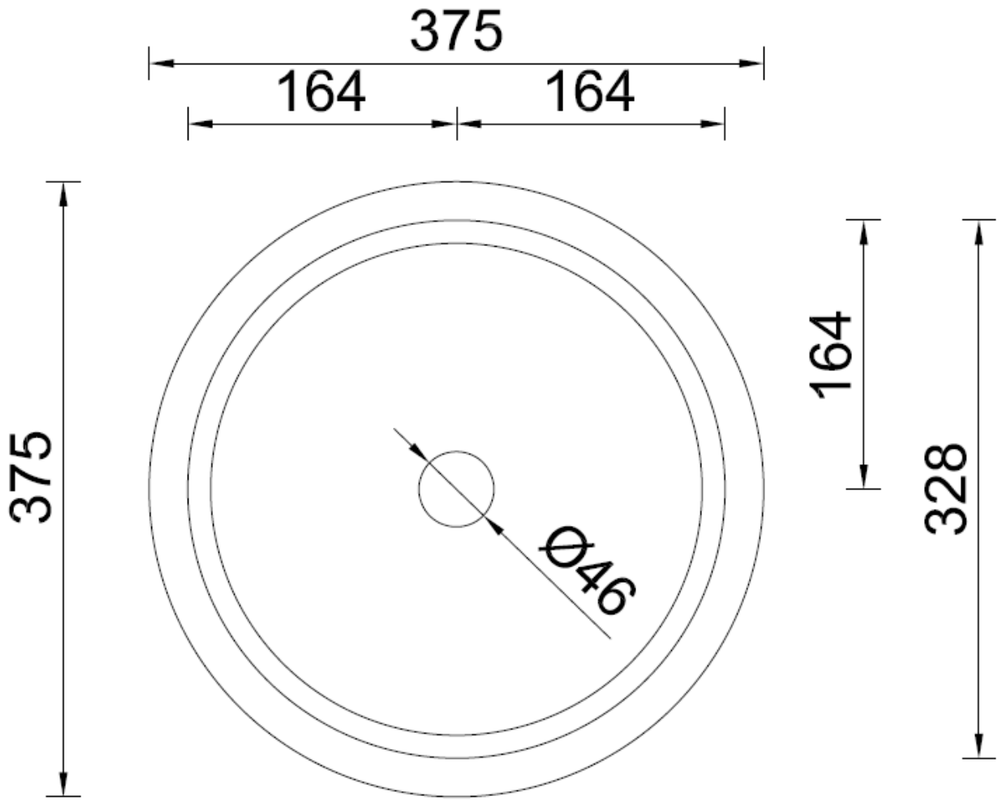


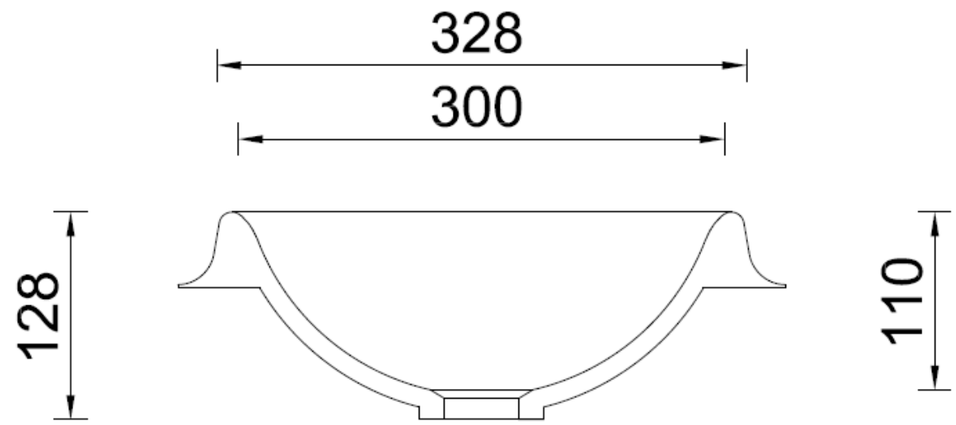


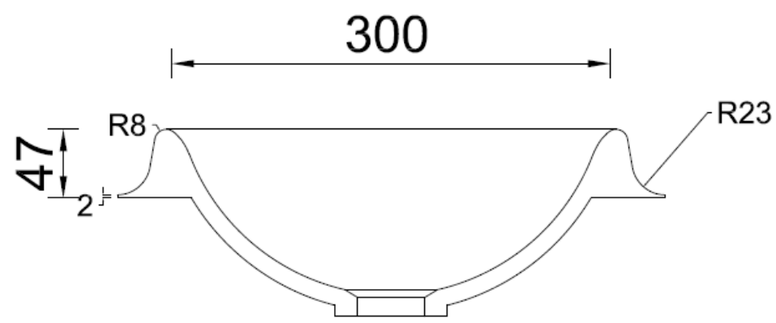


CASF Australia
Unit 3, 208 Walters Road, Arndell Park NSW 2148
Tel: 1300 795 044
Email: projects@casf.com.au

casf
your space your way

CORIAN®
SOLID SURFACE